General Characteristics

Model number (on compressor nameplate)	MLZ015T5LP9A	MLZ015T5LP9A
Code number for Singlepack*	121U8631	121L8631
Code number for Industrial pack**	121U8630	121L8630
Drawing number	0XC6300B-1	0XC6300B-1
Suction and discharge connections	Brazed	Brazed
Suction connection	3/4 " ODF	3/4 " ODF
Discharge connection	1/2 " ODF	1/2 " ODF
Oil sight glass	Threaded	Threaded
Oil equalisation connection	None	None
Oil drain connection	1/4" flare	1/4" flare
LP gauge port	None	None
IPR valve	32 bar	32 bar
Swept volume	33.77 cm3/rev	
Displacement @ Nominal speed	5.9 m3/h @ 2900 rpm	
Net weight	31 kg	
Oil charge	1.06 litre, POE - -	
Maximum system test pressure Low Side / High side	- bar(g) / - bar(g)	
Maximum differential test pressure	- bar	
Maximum number of starts per hour	12	
Refrigerant charge limit	3.63 kg	
Approved refrigerants	R404A,R134a,R407A/F,R448A,R449A,R452A,R513A,R22	

Electrical Characteristics

Nominal voltage	230V/1/50Hz
Voltage range	207-253 V
Winding resistance (main / start) at 25ºC	1.016 Ω / 1.599 Ω
Run capacitors A + C	40 µF + - µF
Start capacitor B	145-175 µF
Start relay	RVA9CKL
Rated Load Amps (RLA)	12.2 A
Maximum Continuous Current (MCC)	19 A
Locked Rotor Amps (LRA)	60 A
Motor protection	Internal overload protector

Recommended Installation torques

Suction Rotolock nut or valve	0 Nm
Discharge Rotolock nut or valve	0 Nm
Oil sight glass	52.5 Nm
Power connections / Earth connection	0 Nm / 0 Nm

Parts shipped with compressor

Mounting kit with grommets and sleeves
Initial oil charge
Installation instructions

Approvals : CE certified, -, -

*Singlepack: Compressor in cardboard box. 121U... optimised for Danfoss pallet, 120U... optimised for US pallet

**Industrial pack: 121U..: 12 unboxed compressors on Danfoss pallet. 120U..: 16 unboxed compressors on US pallet

Dimensions

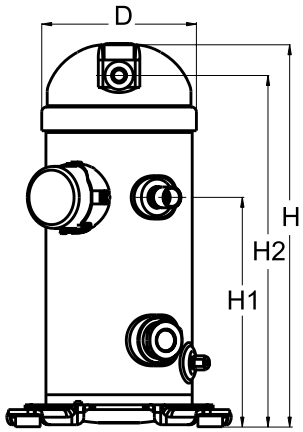

D=164.5 mm
H=412 mm
H1=250 mm
H2=379 mm
H3=- mm

Terminal box

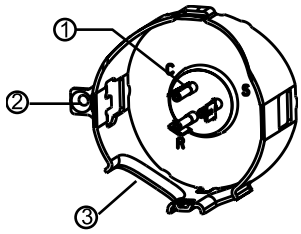

IP22

1: Spade connectors 1/4"
2: Earth connection
3: Power cable passage

Rotolock accessories, suction side	Code no.
Solder sleeve, P04 (1-1/4" Rotolock, 3/4" ODF)	8153008
Rotolock valve, V04 (1-1/4" Rotolock, 3/4" ODF)	8168029
Gasket, 1-1/4"	8156131

Rotolock accessories, discharge side	Code no.
Solder sleeve, P06 (1" Rotolock, 1/2" ODF)	8153007
Rotolock valve, V06 (1" Rotolock, 1/2" ODF)	8168031
Gasket, 1"	8156130

Rotolock accessories, sets	Code no.
Solder sleeve adapter set (1-1/4" Rotolock, 3/4" ODF), (1" Rotolock, 1/2" ODF)	120Z0126
Gasket set, 1", 1-1/4", 1-3/4", OSG gaskets black & white	8156009

Oil / lubricants	Code no.
POE lubricant, 215PZ(PL46HB), 1 litre can	120Z0648

Crankcase heaters	Code no.
Belt type crankcase heater, 70 W, 240 V, CE mark, UL	120Z5040

Miscellaneous accessories	Code no.
Acoustic hood	120Z5083
Discharge thermostat kit	7750009
IP54 upgrade kit	118U0056

Spare parts	Code no.
Mounting kit for 1 scroll compressor including 4 grommets, 4 sleeves, 4 bolts, 4 washers	120Z5005
Terminal box cover	120Z5015

Solder sleeve adapter set

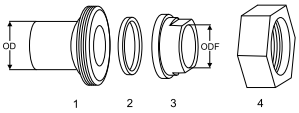

1: Rotolock adapter (Suc & Dis)
2: Gasket (Suc & Dis)
3: Solder sleeve (Suc & Dis)
4: Rotolock nut (Suc & Dis)

General Characteristics

Model number (on compressor nameplate)		**MLZ015T5LT9A**
Code number for Singlepack*		121U8715
Code number for Industrial pack**		121U8714
Drawing number		0XC6290B-1
Suction and discharge connections		Rotolock
Suction connection		2-1/4 " Rotolock
Discharge connection		1-3/4 " Rotolock
Suction connection with supplied sleeve		1-5/8 " -
Discharge connection with supplied sleeve	- "	1-1/8 " -
Oil sight glass		Threaded
Oil equalisation connection		None
Oil drain connection		None
LP gauge port		None
IPR valve		None
Swept volume	33.77 cm3/rev	
Displacement @ Nominal speed	5.9 m3/h @ 2900 rpm	
Net weight	31 kg	
Oil charge	1.06 litre, POE - -	
Maximum system test pressure Low Side / High side	- bar(g) / - bar(g)	
Maximum differential test pressure	- bar	
Maximum number of starts per hour	12	
Refrigerant charge limit	3.63 kg	
Approved refrigerants	R404A,R134a,R407A/F,R448A,R449A,R452A,R513A,R22	

Dimensions

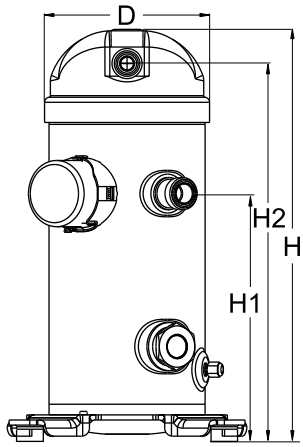

D=184 mm
H=412.1 mm
H1=249.8 mm
H2=379.4 mm
H3=- mm

Electrical Characteristics

Nominal voltage	230V/1/50Hz
Voltage range	207-253 V
Winding resistance (main / start) at 25°C	1.016 Ω / 1.599 Ω
Run capacitors A + C	40 µF + - µF
Start capacitor B	145-175 µF
Start relay	RVA9CKL
Rated Load Amps (RLA)	12.2 A
Maximum Continuous Current (MCC)	19 A
Locked Rotor Amps (LRA)	60 A
Motor protection	Internal overload protector

Terminal box

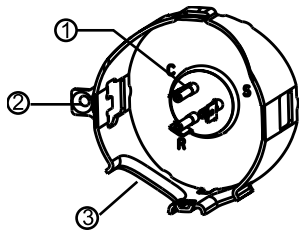

IP22

1: Spade connectors 1/4"
2: Earth connection
3: Power cable passage

Recommended Installation torques

Oil sight glass	52.5 Nm
Power connections / Earth connection	0 Nm / 0 Nm

Parts shipped with compressor

Mounting kit with grommets and sleeves
Initial oil charge
Installation instructions

Approvals : CE certified, UL certified (file SA11565), -

*Singlepack: Compressor in cardboard box. 121U... optimised for Danfoss pallet, 120U... optimised for US pallet

**Industrial pack: 121U..: 12 unboxed compressors on Danfoss pallet. 120U..: 16 unboxed compressors on US pallet

Rotolock accessories, suction side	Code no.
Solder sleeve, P03 (2-1/4" Rotolock, 1-5/8" ODF)	8153006
Rotolock valve, V03 (2-1/4" Rotolock, 1-5/8" ODF)	8168026
Gasket, 2-1/4"	8156133

Rotolock accessories, discharge side	Code no.
Solder sleeve, P02 (1-3/4" Rotolock, 1-1/8" ODF)	8153004
Angle adapter, C02 (1-3/4" Rotolock, 1-1/8" ODF)	8168005
Rotolock valve, V02 (1-3/4" Rotolock, 1-1/8" ODF)	8168028
Gasket, 1-3/4"	8156132

Rotolock accessories, sets	Code no.
Valve set, V03 (2-1/4"~1-5/8"), V02 (1-3/4"~1-1/8")	7703383
Gasket set, 1-1/4", 1-3/4", 2-1/4", OSG gaskets black & white	8156013

Oil / lubricants	Code no.
POE lubricant, 215PZ(PL46HB), 1 litre can	120Z0648

Crankcase heaters	Code no.
Belt type crankcase heater, 70 W, 240 V, CE mark, UL	120Z5040

Miscellaneous accessories	Code no.
Acoustic hood	120Z5083
Discharge thermostat kit	7750009
IP54 upgrade kit	118U0056

Spare parts	Code no.
Mounting kit for 1 scroll compressor including 4 grommets, 4 sleeves, 4 bolts, 4 washers	120Z5005
Terminal box cover	120Z5015

Gaskets, sleeves and nuts

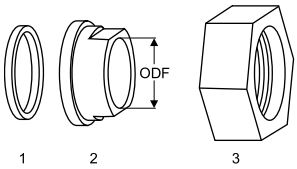

1: Gasket
2: Solder sleeve
3: Rotolock nut

Performance data at 50 Hz, EN 12900 rating conditions, Superheat = 10 K

R22

Cond. temp. in °C (tc)	Evaporating temperature in °C (to)								
	-20	-15	-10	-5	0	5	10		
Cooling capacity in W									
16	3 097	3 710	4 422	5 254	-	-	-	-	-
20	2 951	3 559	4 260	5 077	6 033	-	-	-	-
30	2 618	3 207	3 876	4 651	5 553	6 603	7 820	-	-
40	2 311	2 872	3 502	4 226	5 067	6 047	7 184	-	-
50	-	2 528	3 111	3 776	4 548	5 449	6 501	-	-
60	-	-	-	3 278	3 972	4 787	5 745	-	-
68	-	-	-	-	-	4 194	5 071	-	-
Power input in W									
16	990	985	980	979	-	-	-	-	-
20	1 014	1 017	1 019	1 023	1 031	-	-	-	-
30	1 145	1 163	1 178	1 191	1 204	1 220	1 240	-	-
40	1 381	1 409	1 430	1 446	1 458	1 470	1 482	-	-
50	-	1 759	1 780	1 792	1 799	1 800	1 799	-	-
60	-	-	-	2 238	2 231	2 217	2 197	-	-
68	-	-	-	-	-	2 616	2 576	-	-
Current consumption in A									
16	5.29	5.27	5.24	5.23	-	-	-	-	-
20	5.42	5.44	5.45	5.47	5.51	-	-	-	-
30	6.12	6.22	6.30	6.37	6.44	6.52	6.63	-	-
40	7.38	7.53	7.65	7.73	7.80	7.86	7.93	-	-
50	-	9.41	9.52	9.59	9.62	9.63	9.62	-	-
60	-	-	-	11.97	11.93	11.86	11.75	-	-
68	-	-	-	-	-	13.99	13.78	-	-
Mass flow in kg/h									
16	59	70	83	98	-	-	-	-	-
20	59	70	82	97	114	-	-	-	-
30	57	68	81	96	113	133	156	-	-
40	54	66	79	94	112	132	154	-	-
50	-	62	76	92	109	129	152	-	-
60	-	-	-	87	105	126	149	-	-
68	-	-	-	-	-	122	145	-	-
Coefficient of performance (C.O.P.)									
16	3.13	3.77	4.51	5.37	-	-	-	-	-
20	2.91	3.50	4.18	4.96	5.85	-	-	-	-
30	2.29	2.76	3.29	3.91	4.61	5.41	6.31	-	-
40	1.67	2.04	2.45	2.92	3.47	4.11	4.85	-	-
50	-	1.44	1.75	2.11	2.53	3.03	3.61	-	-
60	-	-	-	1.46	1.78	2.16	2.62	-	-
68	-	-	-	-	-	1.60	1.97	-	-

Nominal performance at to = -10 °C, tc = 45 °C

Cooling capacity	3 310	W
Power input	1 592	W
Current consumption	8.51	A
Mass flow	78	kg/h
C.O.P.	2.08	

to: Evaporating temperature at dew point
tc: Condensing temperature at dew point
Rating conditions : Superheat = 10 K , Subcooling = 0 K

Pressure switch settings

Maximum HP switch setting	29.8	bar(g)
Minimum LP switch setting	0.5	bar(g)
LP pump down setting	0.95	bar(g)

Sound power data

Sound power level	67	dB(A)
With accoustic hood	59	dB(A)

Tolerance according EN12900

Performance data at 50 Hz, EN 12900 rating conditions, Suction temp. = 20 °C

R22

Cond. temp. in °C (tc)	Evaporating temperature in °C (to)								
	-20	-15	-10	-5	0	5	10		
Cooling capacity in W									
16	3 022	3 631	4 341	5 176	-	-	-	-	-
20	2 887	3 490	4 190	5 010	5 974	-	-	-	-
30	2 580	3 165	3 832	4 607	5 514	6 577	7 820	-	-
40	-	2 855	3 483	4 205	5 047	6 032	7 184	-	-
50	-	-	-	3 779	4 547	5 447	6 501	-	-
60	-	-	-	-	3 991	4 797	5 745	-	-
68	-	-	-	-	-	-	5 071	-	-
Power input in W									
16	990	985	980	979	-	-	-	-	-
20	1 014	1 017	1 019	1 023	1 031	-	-	-	-
30	1 145	1 163	1 178	1 191	1 204	1 220	1 240	-	-
40	-	1 409	1 430	1 446	1 458	1 470	1 482	-	-
50	-	-	-	1 792	1 799	1 800	1 799	-	-
60	-	-	-	-	2 231	2 217	2 197	-	-
68	-	-	-	-	-	-	2 576	-	-
Current consumption in A									
16	5.29	5.27	5.24	5.23	-	-	-	-	-
20	5.42	5.44	5.45	5.47	5.51	-	-	-	-
30	6.12	6.22	6.30	6.37	6.44	6.52	6.63	-	-
40	-	7.53	7.65	7.73	7.80	7.86	7.93	-	-
50	-	-	-	9.59	9.62	9.63	9.62	-	-
60	-	-	-	-	11.93	11.86	11.75	-	-
68	-	-	-	-	-	-	13.78	-	-
Mass flow in kg/h									
16	52	63	76	91	-	-	-	-	-
20	52	63	75	91	109	-	-	-	-
30	50	61	74	90	108	130	156	-	-
40	-	59	73	88	107	128	154	-	-
50	-	-	-	86	104	126	152	-	-
60	-	-	-	-	101	123	149	-	-
68	-	-	-	-	-	-	145	-	-
Coefficient of performance (C.O.P.)									
16	3.05	3.69	4.43	5.29	-	-	-	-	-
20	2.85	3.43	4.11	4.90	5.80	-	-	-	-
30	2.25	2.72	3.25	3.87	4.58	5.39	6.31	-	-
40	-	2.03	2.44	2.91	3.46	4.10	4.85	-	-
50	-	-	-	2.11	2.53	3.03	3.61	-	-
60	-	-	-	-	1.79	2.16	2.62	-	-
68	-	-	-	-	-	-	1.97	-	-

Nominal performance at to = -10 °C, tc = 45 °C

Cooling capacity	3 304	W
Power input	1 592	W
Current consumption	8.51	A
Mass flow	71	kg/h
C.O.P.	2.08	

to: Evaporating temperature at dew point
tc: Condensing temperature at dew point
Rating conditions : Suction gas temp. = 20 °C , Subcooling = 0 K

Pressure switch settings

Maximum HP switch setting	29.8	bar(g)
Minimum LP switch setting	0.5	bar(g)
LP pump down setting	0.95	bar(g)

Sound power data

Sound power level	67	dB(A)
With accoustic hood	59	dB(A)

Tolerance according EN12900

Performance data at 50 Hz, EN 12900 rating conditions, Superheat = 10 K

R134a

Cond. temp. in °C (tc)	Evaporating temperature in °C (to)								
	-15	-10	-5	0	5	10	15		
Cooling capacity in W									
22	2 043	2 596	3 217	3 914	4 693	-	-	-	-
30	1 864	2 397	3 001	3 685	4 456	5 321	-	-	-
40	1 640	2 127	2 691	3 340	4 080	4 920	5 868	-	-
50	-	1 851	2 353	2 945	3 634	4 428	5 334	-	-
60	-	-	2 005	2 519	3 135	3 861	4 704	-	-
70	-	-	-	2 078	2 600	3 237	3 995	-	-
73	-	-	-	1 946	2 435	3 041	3 770	-	-
Power input in W									
22	700	706	719	737	762	-	-	-	-
30	796	804	817	835	857	882	-	-	-
40	948	959	973	990	1 009	1 029	1 051	-	-
50	-	1 157	1 173	1 189	1 206	1 221	1 236	-	-
60	-	-	1 425	1 441	1 455	1 467	1 476	-	-
70	-	-	-	1 753	1 765	1 773	1 777	-	-
73	-	-	-	1 859	1 872	1 879	1 880	-	-
Current consumption in A									
22	3.75	3.78	3.84	3.94	4.07	-	-	-	-
30	4.26	4.30	4.37	4.47	4.58	4.72	-	-	-
40	5.07	5.13	5.21	5.29	5.39	5.50	5.62	-	-
50	-	6.19	6.27	6.36	6.45	6.53	6.61	-	-
60	-	-	7.62	7.71	7.78	7.84	7.89	-	-
70	-	-	-	9.37	9.44	9.48	9.50	-	-
73	-	-	-	9.94	10.01	10.05	10.05	-	-
Mass flow in kg/h									
22	44	55	67	80	94	-	-	-	-
30	43	54	67	80	95	111	-	-	-
40	42	53	66	80	96	113	132	-	-
50	-	52	64	78	95	113	133	-	-
60	-	-	62	76	92	111	132	-	-
70	-	-	-	73	89	108	129	-	-
73	-	-	-	72	88	106	128	-	-
Coefficient of performance (C.O.P.)									
22	2.92	3.68	4.48	5.31	6.16	-	-	-	-
30	2.34	2.98	3.67	4.41	5.20	6.03	-	-	-
40	1.73	2.22	2.76	3.37	4.04	4.78	5.58	-	-
50	-	1.60	2.01	2.48	3.01	3.62	4.31	-	-
60	-	-	1.41	1.75	2.15	2.63	3.19	-	-
70	-	-	-	1.19	1.47	1.82	2.25	-	-
73	-	-	-	1.05	1.30	1.62	2.01	-	-

Nominal performance at to = -10 °C, tc = 45 °C

Cooling capacity	1 989	W
Power input	1 052	W
Current consumption	5.63	A
Mass flow	53	kg/h
C.O.P.	1.89	

to: Evaporating temperature at dew point
tc: Condensing temperature at dew point
Rating conditions : Superheat = 10 K , Subcooling = 0 K

Pressure switch settings

Maximum HP switch setting	23.6	bar(g)
Minimum LP switch setting	0.45	bar(g)
LP pump down setting	0.85	bar(g)

Sound power data

Sound power level	67	dB(A)
With accoustic hood	59	dB(A)

Tolerance according EN12900

Performance data at 50 Hz, EN 12900 rating conditions, Suction temp. = 20 °C

R134a

Cond. temp. in °C (tc)	Evaporating temperature in °C (to)								
	-15	-10	-5	0	5	10	15		
Cooling capacity in W									
22	2 075	2 626	3 242	3 931	4 701	-	-	-	-
30	-	2 441	3 040	3 713	4 471	5 321	-	-	-
40	-	-	2 747	3 383	4 104	4 920	5 840	-	-
50	-	-	2 425	3 002	3 667	4 428	5 291	-	-
60	-	-	-	2 589	3 177	3 861	-	-	-
70	-	-	-	-	2 650	3 237	-	-	-
73	-	-	-	-	2 488	3 041	-	-	-
Power input in W									
22	700	706	719	737	762	-	-	-	-
30	-	804	817	835	857	882	-	-	-
40	-	-	973	990	1 009	1 029	1 051	-	-
50	-	-	1 173	1 189	1 206	1 221	1 236	-	-
60	-	-	-	1 441	1 455	1 467	-	-	-
70	-	-	-	-	1 765	1 773	-	-	-
73	-	-	-	-	1 872	1 879	-	-	-
Current consumption in A									
22	3.75	3.78	3.84	3.94	4.07	-	-	-	-
30	-	4.30	4.37	4.47	4.58	4.72	-	-	-
40	-	-	5.21	5.29	5.39	5.50	5.62	-	-
50	-	-	6.27	6.36	6.45	6.53	6.61	-	-
60	-	-	-	7.71	7.78	7.84	-	-	-
70	-	-	-	-	9.44	9.48	-	-	-
73	-	-	-	-	10.01	10.05	-	-	-
Mass flow in kg/h									
22	39	50	63	76	92	-	-	-	-
30	-	50	63	77	93	111	-	-	-
40	-	-	62	76	93	113	136	-	-
50	-	-	60	75	92	113	136	-	-
60	-	-	-	73	90	111	-	-	-
70	-	-	-	-	87	108	-	-	-
73	-	-	-	-	86	106	-	-	-
Coefficient of performance (C.O.P.)									
22	2.96	3.72	4.51	5.33	6.17	-	-	-	-
30	-	3.03	3.72	4.45	5.22	6.03	-	-	-
40	-	-	2.82	3.42	4.07	4.78	5.56	-	-
50	-	-	2.07	2.52	3.04	3.62	4.28	-	-
60	-	-	-	1.80	2.18	2.63	-	-	-
70	-	-	-	-	1.50	1.82	-	-	-
73	-	-	-	-	1.33	1.62	-	-	-

Nominal performance at to = -10 °C, tc = 45 °C

Cooling capacity	-	W
Power input	-	W
Current consumption	-	A
Mass flow	-	kg/h
C.O.P.	-	

to: Evaporating temperature at dew point
tc: Condensing temperature at dew point
Rating conditions : Suction gas temp. = 20 °C , Subcooling = 0 K

Pressure switch settings

Maximum HP switch setting	23.6	bar(g)
Minimum LP switch setting	0.45	bar(g)
LP pump down setting	0.85	bar(g)

Sound power data

Sound power level	67	dB(A)
With accoustic hood	59	dB(A)

Tolerance according EN12900

Performance data at 50 Hz, EN 12900 rating conditions, Suction temp. = 20 °C

R404A

Cond. temp. in °C (tc)	Evaporating temperature in °C (to)								
	-30	-25	-20	-15	-10	-5	0	5	10
Cooling capacity in W									
10	2 391	2 960	3 644	4 452	5 390	-	-	-	-
20	2 170	2 687	3 305	4 033	4 877	5 846	6 946	-	-
30	1 925	2 387	2 938	3 583	4 332	5 190	6 167	7 268	8 500
40	-	2 059	2 539	3 100	3 750	4 497	5 348	6 310	7 390
50	-	-	2 106	2 581	3 131	3 764	4 487	5 307	6 233
60	-	-	-	-	2 471	2 988	3 581	4 259	5 029
Power input in W									
10	799	802	824	850	866	-	-	-	-
20	939	931	947	972	992	994	962	-	-
30	1 212	1 194	1 205	1 230	1 256	1 268	1 252	1 195	1 080
40	-	1 536	1 543	1 569	1 602	1 626	1 627	1 592	1 506
50	-	-	1 906	1 934	1 974	2 011	2 031	2 019	1 962
60	-	-	-	-	2 319	2 370	2 409	2 422	2 394
Current consumption in A									
10	4.27	4.29	4.41	4.55	4.63	-	-	-	-
20	5.02	4.98	5.06	5.20	5.31	5.31	5.14	-	-
30	6.48	6.39	6.44	6.58	6.72	6.78	6.70	6.39	5.78
40	-	8.22	8.25	8.39	8.56	8.69	8.70	8.51	8.05
50	-	-	10.19	10.34	10.56	10.76	10.86	10.80	10.49
60	-	-	-	-	12.40	12.67	12.88	12.95	12.80
Mass flow in kg/h									
10	42	57	73	91	112	-	-	-	-
20	44	58	73	91	110	133	159	-	-
30	45	58	72	89	108	131	157	187	222
40	-	56	70	86	106	128	154	185	220
50	-	-	67	83	102	124	151	182	218
60	-	-	-	-	97	120	147	178	215
Coefficient of performance (C.O.P.)									
10	2.99	3.69	4.42	5.24	6.23	-	-	-	-
20	2.31	2.89	3.49	4.15	4.92	5.88	7.22	-	-
30	1.59	2.00	2.44	2.91	3.45	4.09	4.92	6.08	7.87
40	-	1.34	1.65	1.98	2.34	2.77	3.29	3.96	4.91
50	-	-	1.11	1.33	1.59	1.87	2.21	2.63	3.18
60	-	-	-	-	1.07	1.26	1.49	1.76	2.10

Nominal performance at to = -10 °C, tc = 45 °C

Cooling capacity	3 446	W
Power input	1 788	W
Current consumption	9.56	A
Mass flow	104	kg/h
C.O.P.	1.93	

to: Evaporating temperature at dew point
tc: Condensing temperature at dew point
Rating conditions : Suction gas temp. = 20 °C , Subcooling = 0 K

Pressure switch settings

Maximum HP switch setting	29.7	bar(g)
Minimum LP switch setting	1.4	bar(g)
LP pump down setting	2	bar(g)

Sound power data

Sound power level	67	dB(A)
With accoustic hood	59	dB(A)

Tolerance according EN12900

Performance data at 50 Hz, EN 12900 rating conditions, Superheat = 10 K

R404A

Cond. temp. in °C (tc)	Evaporating temperature in °C (to)								
	-30	-25	-20	-15	-10	-5	0	5	10
Cooling capacity in W									
10	2 297	2 864	3 551	4 366	5 318	-	-	-	-
20	2 041	2 551	3 169	3 902	4 760	5 750	6 880	-	-
30	1 761	2 213	2 759	3 407	4 169	5 052	6 064	7 213	8 500
40	1 456	1 847	2 319	2 880	3 543	4 316	5 209	6 232	7 390
50	-	-	1 848	2 319	2 879	3 539	4 311	5 205	6 233
60	-	-	-	-	2 174	2 718	3 365	4 130	5 029
Power input in W									
10	799	802	824	850	866	-	-	-	-
20	939	931	947	972	992	994	962	-	-
30	1 212	1 194	1 205	1 230	1 256	1 268	1 252	1 195	1 080
40	1 564	1 536	1 543	1 569	1 602	1 626	1 627	1 592	1 506
50	-	-	1 906	1 934	1 974	2 011	2 031	2 019	1 962
60	-	-	-	-	2 319	2 370	2 409	2 422	2 394
Current consumption in A									
10	4.27	4.29	4.41	4.55	4.63	-	-	-	-
20	5.02	4.98	5.06	5.20	5.31	5.31	5.14	-	-
30	6.48	6.39	6.44	6.58	6.72	6.78	6.70	6.39	5.78
40	8.37	8.22	8.25	8.39	8.56	8.69	8.70	8.51	8.05
50	-	-	10.19	10.34	10.56	10.76	10.86	10.80	10.49
60	-	-	-	-	12.40	12.67	12.88	12.95	12.80
Mass flow in kg/h									
10	50	67	84	103	123	-	-	-	-
20	53	68	84	102	122	144	168	-	-
30	54	68	83	100	120	142	166	193	222
40	53	66	81	97	116	138	163	190	220
50	-	-	77	93	112	134	159	187	218
60	-	-	-	-	108	130	155	184	215
Coefficient of performance (C.O.P.)									
10	2.88	3.57	4.31	5.14	6.14	-	-	-	-
20	2.17	2.74	3.35	4.01	4.80	5.79	7.15	-	-
30	1.45	1.85	2.29	2.77	3.32	3.98	4.84	6.04	7.87
40	0.93	1.20	1.50	1.84	2.21	2.65	3.20	3.91	4.91
50	-	-	0.97	1.20	1.46	1.76	2.12	2.58	3.18
60	-	-	-	-	0.94	1.15	1.40	1.71	2.10

Nominal performance at to = -10 °C, tc = 45 °C

Cooling capacity	3 216	W
Power input	1 788	W
Current consumption	9.56	A
Mass flow	115	kg/h
C.O.P.	1.80	

to: Evaporating temperature at dew point
tc: Condensing temperature at dew point
Rating conditions : Superheat = 10 K , Subcooling = 0 K

Pressure switch settings

Maximum HP switch setting	29.7	bar(g)
Minimum LP switch setting	1.4	bar(g)
LP pump down setting	2	bar(g)

Sound power data

Sound power level	67	dB(A)
With accoustic hood	59	dB(A)

Tolerance according EN12900

Performance data at 50 Hz, EN 12900 rating conditions

R407A

Cond. temp. in °C (tc)	Evaporating temperature in °C (to)								
	-25	-20	-15	-10	-5	0	5	10	
Cooling capacity in W									
10	2 481	3 103	3 854	4 749	-	-	-	-	-
20	2 215	2 805	3 515	4 363	5 364	6 535	-	-	-
30	1 915	2 458	3 114	3 900	4 833	5 927	7 200	8 667	-
40	1 594	2 076	2 664	3 375	4 224	5 228	6 403	7 765	-
45	-	1 876	2 425	3 092	3 895	4 848	5 969	7 274	-
50	-	-	2 179	2 799	3 551	4 451	5 514	6 757	-
55	-	-	-	2 498	3 196	4 038	5 040	6 218	-
60	-	-	-	-	2 830	3 610	4 547	5 657	-
Power input in W									
10	751	760	761	751	-	-	-	-	-
20	903	920	933	938	932	914	-	-	-
30	1 095	1 116	1 136	1 152	1 162	1 161	1 148	1 119	-
40	1 354	1 375	1 398	1 421	1 440	1 454	1 458	1 450	-
45	-	1 535	1 558	1 583	1 606	1 625	1 637	1 638	-
50	-	-	1 744	1 769	1 795	1 818	1 836	1 845	-
55	-	-	-	1 981	2 009	2 035	2 058	2 074	-
60	-	-	-	-	2 251	2 280	2 307	2 329	-
Current consumption in A									
10	3.92	4.01	4.08	4.12	-	-	-	-	-
20	5.14	5.24	5.31	5.35	5.38	5.40	-	-	-
30	5.84	5.94	6.02	6.06	6.09	6.11	6.14	6.17	-
40	6.46	6.56	6.63	6.68	6.71	6.73	6.75	6.78	-
45	-	6.98	7.05	7.09	7.12	7.14	7.16	7.19	-
50	-	-	7.60	7.64	7.67	7.68	7.70	7.73	-
55	-	-	-	8.39	8.41	8.42	8.43	8.46	-
60	-	-	-	-	9.40	9.40	9.41	9.43	-
Mass flow in kg/h									
10	48	60	73	89	-	-	-	-	-
20	47	59	72	88	107	128	-	-	-
30	45	56	70	86	105	127	152	180	-
40	42	53	66	83	101	123	149	178	-
45	-	51	64	80	99	121	147	176	-
50	-	-	62	77	96	118	144	173	-
55	-	-	-	74	93	115	140	170	-
60	-	-	-	-	89	111	136	166	-
Coefficient of performance (C.O.P.)									
10	3.30	4.08	5.07	6.33	-	-	-	-	-
20	2.45	3.05	3.77	4.65	5.75	7.15	-	-	-
30	1.75	2.20	2.74	3.38	4.16	5.10	6.27	7.75	-
40	1.18	1.51	1.91	2.38	2.93	3.60	4.39	5.35	-
45	-	1.22	1.56	1.95	2.42	2.98	3.65	4.44	-
50	-	-	1.25	1.58	1.98	2.45	3.00	3.66	-
55	-	-	-	1.26	1.59	1.98	2.45	3.00	-
60	-	-	-	-	1.26	1.58	1.97	2.43	-

Nominal performance at to = -10 °C, tc = 45 °C

Cooling capacity	3 092	W
Power input	1 583	W
Current consumption	7.09	A
Mass flow	80	kg/h
C.O.P.	1.95	

Pressure switch settings

Maximum HP switch setting	29.7	bar(g)
Minimum LP switch setting	1.4	bar(g)
LP pump down setting	2	bar(g)

Sound power data

Sound power level	67	dB(A)
With accoustic hood	59	dB(A)

to: Evaporating temperature at dew point
tc: Condensing temperature at dew point
Rating conditions : Superheat = 10 K , Subcooling = 0 K

Tolerance according EN12900

Performance data at 50 Hz, ARI rating conditions

R407A

Cond. temp. in °C (tc)	Evaporating temperature in °C (to)								
	-25	-20	-15	-10	-5	0	5	10	
Cooling capacity in W									
10	2 635	3 293	4 085	5 030	-	-	-	-	-
20	2 370	2 997	3 753	4 653	5 714	6 955	-	-	-
30	2 068	2 650	3 354	4 195	5 192	6 360	7 717	9 279	-
40	1 743	2 266	2 903	3 671	4 588	5 670	6 935	8 399	-
45	-	2 064	2 662	3 388	4 260	5 294	6 508	7 918	-
50	-	-	2 413	3 094	3 917	4 900	6 059	7 412	-
55	-	-	-	2 791	3 562	4 490	5 593	6 886	-
60	-	-	-	-	-	4 067	5 110	6 342	-
Power input in W									
10	751	760	761	751	-	-	-	-	-
20	903	920	933	938	932	914	-	-	-
30	1 095	1 116	1 136	1 152	1 162	1 161	1 148	1 119	-
40	1 354	1 375	1 398	1 421	1 440	1 454	1 458	1 450	-
45	-	1 535	1 558	1 583	1 606	1 625	1 637	1 638	-
50	-	-	1 744	1 769	1 795	1 818	1 836	1 845	-
55	-	-	-	1 981	2 009	2 035	2 058	2 074	-
60	-	-	-	-	-	2 280	2 307	2 329	-
Current consumption in A									
10	3.92	4.01	4.08	4.12	-	-	-	-	-
20	5.14	5.24	5.31	5.35	5.38	5.40	-	-	-
30	5.84	5.94	6.02	6.06	6.09	6.11	6.14	6.17	-
40	6.46	6.56	6.63	6.68	6.71	6.73	6.75	6.78	-
45	-	6.98	7.05	7.09	7.12	7.14	7.16	7.19	-
50	-	-	7.60	7.64	7.67	7.68	7.70	7.73	-
55	-	-	-	8.39	8.41	8.42	8.43	8.46	-
60	-	-	-	-	-	9.40	9.41	9.43	-
Mass flow in kg/h									
10	48	59	73	88	-	-	-	-	-
20	47	58	72	88	106	127	-	-	-
30	45	56	70	86	104	126	151	179	-
40	41	53	66	82	101	123	148	177	-
45	-	50	64	80	99	120	146	175	-
50	-	-	61	77	96	118	143	172	-
55	-	-	-	74	92	114	140	169	-
60	-	-	-	-	-	110	136	165	-
Coefficient of performance (C.O.P.)									
10	3.51	4.33	5.37	6.70	-	-	-	-	-
20	2.62	3.26	4.02	4.96	6.13	7.61	-	-	-
30	1.89	2.37	2.95	3.64	4.47	5.48	6.72	8.29	-
40	1.29	1.65	2.08	2.58	3.19	3.90	4.76	5.79	-
45	-	1.34	1.71	2.14	2.65	3.26	3.98	4.83	-
50	-	-	1.38	1.75	2.18	2.70	3.30	4.02	-
55	-	-	-	1.41	1.77	2.21	2.72	3.32	-
60	-	-	-	-	-	1.78	2.22	2.72	-

Nominal performance at to = -10 °C, tc = 45 °C

Cooling capacity	3 388	W
Power input	1 583	W
Current consumption	7.09	A
Mass flow	80	kg/h
C.O.P.	2.14	

Pressure switch settings

Maximum HP switch setting	29.7	bar(g)
Minimum LP switch setting	1.4	bar(g)
LP pump down setting	2	bar(g)

Sound power data

Sound power level	67	dB(A)
With accoustic hood	59	dB(A)

to: Evaporating temperature at dew point

tc: Condensing temperature at dew point

Rating conditions : Superheat = 11.1 K , Subcooling = 8.3 K

Tolerance according EN12900

Performance data at 50 Hz, EN 12900 rating conditions

R407F

Cond. temp. in °C (tc)	Evaporating temperature in °C (to)								
	-23	-20	-15	-10	-5	0	5	10	
Cooling capacity in W									
10	2 905	3 316	4 106	5 044	-	-	-	-	-
20	2 620	3 011	3 764	4 657	5 708	6 933	-	-	-
30	2 292	2 654	3 354	4 188	5 172	6 325	7 662	9 202	-
40	1 935	2 260	2 890	3 649	4 552	5 616	6 859	8 298	-
45	-	-	2 643	3 357	4 214	5 228	6 419	7 801	-
50	-	-	-	3 054	3 860	4 821	5 954	7 276	-
55	-	-	-	-	3 491	4 395	5 467	6 725	-
60	-	-	-	-	-	-	-	-	-
Power input in W									
10	803	805	807	807	-	-	-	-	-
20	974	979	986	990	993	994	-	-	-
30	1 185	1 196	1 211	1 221	1 227	1 232	1 235	1 239	-
40	1 457	1 474	1 498	1 516	1 530	1 540	1 547	1 553	-
45	-	-	1 672	1 695	1 713	1 726	1 736	1 744	-
50	-	-	-	1 897	1 920	1 937	1 950	1 961	-
55	-	-	-	-	2 153	2 175	2 192	2 206	-
60	-	-	-	-	-	-	-	-	-
Current consumption in A									
10	4.21	4.26	4.32	4.34	-	-	-	-	-
20	5.54	5.60	5.67	5.70	5.72	5.72	-	-	-
30	6.32	6.37	6.44	6.48	6.50	6.51	6.52	6.55	-
40	7.00	7.06	7.12	7.15	7.17	7.18	7.20	7.23	-
45	-	-	7.57	7.60	7.62	7.63	7.64	7.67	-
50	-	-	-	8.20	8.21	8.22	8.23	8.25	-
55	-	-	-	-	9.02	9.02	9.03	9.05	-
60	-	-	-	-	-	-	-	-	-
Mass flow in kg/h									
10	51	58	70	85	-	-	-	-	-
20	49	56	69	85	103	123	-	-	-
30	47	54	67	83	101	122	146	173	-
40	44	51	64	79	97	118	143	171	-
45	-	-	61	77	95	116	141	168	-
50	-	-	-	74	92	113	138	166	-
55	-	-	-	-	89	110	134	162	-
60	-	-	-	-	-	-	-	-	-
Coefficient of performance (C.O.P.)									
10	3.62	4.12	5.09	6.25	-	-	-	-	-
20	2.69	3.07	3.82	4.70	5.75	6.97	-	-	-
30	1.93	2.22	2.77	3.43	4.21	5.13	6.20	7.43	-
40	1.33	1.53	1.93	2.41	2.97	3.65	4.43	5.34	-
45	-	-	1.58	1.98	2.46	3.03	3.70	4.47	-
50	-	-	-	1.61	2.01	2.49	3.05	3.71	-
55	-	-	-	-	1.62	2.02	2.49	3.05	-
60	-	-	-	-	-	-	-	-	-

Nominal performance at to = -10 °C, tc = 45 °C

Cooling capacity	3 357	W
Power input	1 695	W
Current consumption	7.60	A
Mass flow	77	kg/h
C.O.P.	1.98	

Pressure switch settings

Maximum HP switch setting	29.7	bar(g)
Minimum LP switch setting	1.4	bar(g)
LP pump down setting	2	bar(g)

Sound power data

Sound power level	67	dB(A)
With accoustic hood	59	dB(A)

to: Evaporating temperature at dew point
tc: Condensing temperature at dew point
Rating conditions : Superheat = 10 K , Subcooling = 0 K

Tolerance according EN12900

Performance data at 50 Hz, ARI rating conditions

R407F

Cond. temp. in °C (tc)	Evaporating temperature in °C (to)								
	-23	-20	-15	-10	-5	0	5	10	
Cooling capacity in W									
10	3 070	3 503	4 335	5 320	-	-	-	-	-
20	2 785	3 200	3 997	4 941	6 051	7 344	-	-	-
30	2 455	2 842	3 587	4 475	5 522	6 746	8 166	9 799	-
40	-	2 443	3 121	3 935	4 904	6 044	7 374	8 913	-
45	-	-	2 871	3 643	4 566	5 659	6 939	8 424	-
50	-	-	-	3 338	4 212	5 253	6 480	7 909	-
55	-	-	-	-	-	4 831	6 000	7 371	-
60	-	-	-	-	-	-	-	-	-
Power input in W									
10	803	805	807	807	-	-	-	-	-
20	974	979	986	990	993	994	-	-	-
30	1 185	1 196	1 211	1 221	1 227	1 232	1 235	1 239	-
40	-	1 474	1 498	1 516	1 530	1 540	1 547	1 553	-
45	-	-	1 672	1 695	1 713	1 726	1 736	1 744	-
50	-	-	-	1 897	1 920	1 937	1 950	1 961	-
55	-	-	-	-	-	2 175	2 192	2 206	-
60	-	-	-	-	-	-	-	-	-
Current consumption in A									
10	4.21	4.26	4.32	4.34	-	-	-	-	-
20	5.54	5.60	5.67	5.70	5.72	5.72	-	-	-
30	6.32	6.37	6.44	6.48	6.50	6.51	6.52	6.55	-
40	-	7.06	7.12	7.15	7.17	7.18	7.20	7.23	-
45	-	-	7.57	7.60	7.62	7.63	7.64	7.67	-
50	-	-	-	8.20	8.21	8.22	8.23	8.25	-
55	-	-	-	-	-	9.02	9.03	9.05	-
60	-	-	-	-	-	-	-	-	-
Mass flow in kg/h									
10	50	57	70	85	-	-	-	-	-
20	49	56	69	84	102	122	-	-	-
30	47	54	67	82	100	121	145	172	-
40	-	50	63	79	97	118	142	170	-
45	-	-	61	76	94	115	140	167	-
50	-	-	-	74	92	113	137	165	-
55	-	-	-	-	-	109	133	161	-
60	-	-	-	-	-	-	-	-	-
Coefficient of performance (C.O.P.)									
10	3.82	4.35	5.37	6.59	-	-	-	-	-
20	2.86	3.27	4.05	4.99	6.09	7.38	-	-	-
30	2.07	2.38	2.96	3.67	4.50	5.48	6.61	7.91	-
40	-	1.66	2.08	2.60	3.21	3.93	4.77	5.74	-
45	-	-	1.72	2.15	2.67	3.28	4.00	4.83	-
50	-	-	-	1.76	2.19	2.71	3.32	4.03	-
55	-	-	-	-	-	2.22	2.74	3.34	-
60	-	-	-	-	-	-	-	-	-

Nominal performance at to = -10 °C, tc = 45 °C

Cooling capacity	3 643	W
Power input	1 695	W
Current consumption	7.60	A
Mass flow	76	kg/h
C.O.P.	2.15	

Pressure switch settings

Maximum HP switch setting	29.7	bar(g)
Minimum LP switch setting	1.4	bar(g)
LP pump down setting	2	bar(g)

Sound power data

Sound power level	67	dB(A)
With accoustic hood	59	dB(A)

to: Evaporating temperature at dew point

tc: Condensing temperature at dew point

Rating conditions : Superheat = 11.1 K , Subcooling = 8.3 K

Tolerance according EN12900

Performance data at 50 Hz, EN 12900 rating conditions, Suction temp. = 20 °C

R448A

Cond. temp. in °C (tc)	Evaporating temperature in °C (to)								
	-30	-25	-20	-15	-10	-5	0	5	10
Cooling capacity in W									
10	1 929	2 450	3 075	3 822	4 705	-	-	-	-
20	1 722	2 220	2 810	3 509	4 332	5 293	6 408	-	-
30	-	-	2 521	3 163	3 916	4 796	5 817	6 995	8 345
40	-	-	-	2 793	3 468	4 257	5 175	6 238	7 460
50	-	-	-	-	2 995	3 685	4 492	5 430	6 515
60	-	-	-	-	-	-	3 775	4 580	5 519
Power input in W									
10	767	786	798	806	813	-	-	-	-
20	915	942	962	976	989	1 001	1 016	-	-
30	-	-	1 156	1 176	1 192	1 208	1 226	1 248	1 277
40	-	-	-	1 440	1 459	1 477	1 496	1 519	1 548
50	-	-	-	-	1 824	1 843	1 861	1 883	1 910
60	-	-	-	-	-	-	2 356	2 375	2 398
Current consumption in A									
10	3.93	4.02	4.09	4.13	4.15	-	-	-	-
20	4.53	4.63	4.71	4.78	4.83	4.88	4.93	-	-
30	-	-	5.52	5.60	5.67	5.74	5.82	5.90	5.99
40	-	-	-	6.73	6.81	6.89	6.98	7.09	7.21
50	-	-	-	-	8.41	8.48	8.58	8.69	8.83
60	-	-	-	-	-	-	10.75	10.85	10.99
Mass flow in kg/h									
10	31	40	51	63	78	-	-	-	-
20	30	39	50	62	77	95	116	-	-
30	-	-	48	61	76	93	114	139	168
40	-	-	-	59	73	91	112	136	165
50	-	-	-	-	70	88	108	133	161
60	-	-	-	-	-	-	104	128	156
Coefficient of performance (C.O.P.)									
10	2.51	3.12	3.85	4.74	5.79	-	-	-	-
20	1.88	2.36	2.92	3.59	4.38	5.29	6.31	-	-
30	-	-	2.18	2.69	3.28	3.97	4.74	5.60	6.54
40	-	-	-	1.94	2.38	2.88	3.46	4.11	4.82
50	-	-	-	-	1.64	2.00	2.41	2.88	3.41
60	-	-	-	-	-	-	1.60	1.93	2.30

Nominal performance at to = -10 °C, tc = 45 °C

Cooling capacity	3 234	W
Power input	1 627	W
Current consumption	7.54	A
Mass flow	72	kg/h
C.O.P.	1.99	

to: Evaporating temperature at dew point
tc: Condensing temperature at dew point
Rating conditions : Suction gas temp. = 20 °C , Subcooling = 0 K

Pressure switch settings

Maximum HP switch setting	29.7	bar(g)
Minimum LP switch setting	1.4	bar(g)
LP pump down setting	2	bar(g)

Sound power data

Sound power level	dB(A)
With accoustic hood	dB(A)

Tolerance according EN12900

Performance data at 50 Hz, EN 12900 rating conditions, Superheat = 10 K

R448A

Cond. temp. in °C (tc)	Evaporating temperature in °C (to)								
	-30	-25	-20	-15	-10	-5	0	5	10
Cooling capacity in W									
10	1 937	2 462	3 093	3 846	4 736	-	-	-	-
20	1 707	2 206	2 799	3 502	4 331	5 299	6 420	-	-
30	1 472	1 935	2 481	3 125	3 884	4 772	5 803	6 991	8 345
40	-	-	2 148	2 724	3 404	4 203	5 136	6 217	7 460
50	-	-	-	2 308	2 901	3 601	4 426	5 393	6 515
60	-	-	-	-	2 381	2 974	3 683	4 526	5 519
Power input in W									
10	767	786	798	806	813	-	-	-	-
20	915	942	962	976	989	1 001	1 016	-	-
30	1 098	1 131	1 156	1 176	1 192	1 208	1 226	1 248	1 277
40	-	-	1 417	1 440	1 459	1 477	1 496	1 519	1 548
50	-	-	-	1 804	1 824	1 843	1 861	1 883	1 910
60	-	-	-	-	2 322	2 339	2 356	2 375	2 398
Current consumption in A									
10	3.93	4.02	4.09	4.13	4.15	-	-	-	-
20	4.53	4.63	4.71	4.78	4.83	4.88	4.93	-	-
30	5.33	5.43	5.52	5.60	5.67	5.74	5.82	5.90	5.99
40	-	-	6.66	6.73	6.81	6.89	6.98	7.09	7.21
50	-	-	-	8.34	8.41	8.48	8.58	8.69	8.83
60	-	-	-	-	10.61	10.67	10.75	10.85	10.99
Mass flow in kg/h									
10	37	47	58	71	86	-	-	-	-
20	36	45	57	70	85	102	122	-	-
30	34	44	55	68	83	100	120	143	168
40	-	-	53	66	80	98	118	140	165
50	-	-	-	63	77	94	114	136	161
60	-	-	-	-	74	90	110	132	156
Coefficient of performance (C.O.P.)									
10	2.53	3.13	3.87	4.77	5.83	-	-	-	-
20	1.87	2.34	2.91	3.59	4.38	5.29	6.32	-	-
30	1.34	1.71	2.15	2.66	3.26	3.95	4.73	5.60	6.54
40	-	-	1.52	1.89	2.33	2.84	3.43	4.09	4.82
50	-	-	-	1.28	1.59	1.95	2.38	2.86	3.41
60	-	-	-	-	1.03	1.27	1.56	1.91	2.30

Nominal performance at to = -10 °C, tc = 45 °C

Cooling capacity	3 155	W
Power input	1 627	W
Current consumption	7.54	A
Mass flow	79	kg/h
C.O.P.	1.94	

to: Evaporating temperature at dew point
tc: Condensing temperature at dew point
Rating conditions : Superheat = 10 K , Subcooling = 0 K

Pressure switch settings

Maximum HP switch setting	29.7	bar(g)
Minimum LP switch setting	1.4	bar(g)
LP pump down setting	2	bar(g)

Sound power data

Sound power level	dB(A)
With accoustic hood	dB(A)

Tolerance according EN12900

Performance data at 50 Hz, EN 12900 rating conditions, Suction temp. = 20 °C

R449A

Cond. temp. in °C (tc)	Evaporating temperature in °C (to)								
	-30	-25	-20	-15	-10	-5	0	5	10
Cooling capacity in W									
10	1 929	2 450	3 075	3 822	4 705	-	-	-	-
20	1 722	2 220	2 810	3 509	4 332	5 293	6 408	-	-
30	-	-	2 521	3 163	3 916	4 796	5 817	6 995	8 345
40	-	-	-	2 793	3 468	4 257	5 175	6 238	7 460
50	-	-	-	-	2 995	3 685	4 492	5 430	6 515
60	-	-	-	-	-	-	3 775	4 580	5 519
Power input in W									
10	767	786	798	806	813	-	-	-	-
20	915	942	962	976	989	1 001	1 016	-	-
30	-	-	1 156	1 176	1 192	1 208	1 226	1 248	1 277
40	-	-	-	1 440	1 459	1 477	1 496	1 519	1 548
50	-	-	-	-	1 824	1 843	1 861	1 883	1 910
60	-	-	-	-	-	-	2 356	2 375	2 398
Current consumption in A									
10	3.93	4.02	4.09	4.13	4.15	-	-	-	-
20	4.53	4.63	4.71	4.78	4.83	4.88	4.93	-	-
30	-	-	5.52	5.60	5.67	5.74	5.82	5.90	5.99
40	-	-	-	6.73	6.81	6.89	6.98	7.09	7.21
50	-	-	-	-	8.41	8.48	8.58	8.69	8.83
60	-	-	-	-	-	-	10.75	10.85	10.99
Mass flow in kg/h									
10	31	40	51	63	78	-	-	-	-
20	30	39	50	62	77	95	116	-	-
30	-	-	48	61	76	93	114	139	168
40	-	-	-	59	73	91	112	136	165
50	-	-	-	-	70	88	108	133	161
60	-	-	-	-	-	-	104	128	156
Coefficient of performance (C.O.P.)									
10	2.51	3.12	3.85	4.74	5.79	-	-	-	-
20	1.88	2.36	2.92	3.59	4.38	5.29	6.31	-	-
30	-	-	2.18	2.69	3.28	3.97	4.74	5.60	6.54
40	-	-	-	1.94	2.38	2.88	3.46	4.11	4.82
50	-	-	-	-	1.64	2.00	2.41	2.88	3.41
60	-	-	-	-	-	-	1.60	1.93	2.30

Nominal performance at to = -10 °C, tc = 45 °C

Cooling capacity	3 234	W
Power input	1 627	W
Current consumption	7.54	A
Mass flow	72	kg/h
C.O.P.	1.99	

to: Evaporating temperature at dew point
tc: Condensing temperature at dew point
Rating conditions : Suction gas temp. = 20 °C , Subcooling = 0 K

Pressure switch settings

Maximum HP switch setting	29.7	bar(g)
Minimum LP switch setting	1.4	bar(g)
LP pump down setting	2	bar(g)

Sound power data

Sound power level	dB(A)
With accoustic hood	dB(A)

Tolerance according EN12900

Performance data at 50 Hz, EN 12900 rating conditions, Superheat = 10 K

R449A

Cond. temp. in °C (tc)	Evaporating temperature in °C (to)								
	-30	-25	-20	-15	-10	-5	0	5	10
Cooling capacity in W									
10	1 933	2 457	3 088	3 841	4 731	-	-	-	-
20	1 703	2 201	2 794	3 497	4 326	5 295	6 417	-	-
30	1 467	1 930	2 475	3 120	3 879	4 767	5 800	6 989	8 345
40	-	-	2 142	2 719	3 399	4 198	5 132	6 215	7 460
50	-	-	-	2 302	2 895	3 596	4 422	5 390	6 515
60	-	-	-	-	2 375	2 969	3 679	4 523	5 519
Power input in W									
10	767	786	798	806	813	-	-	-	-
20	915	942	962	976	989	1 001	1 016	-	-
30	1 098	1 131	1 156	1 176	1 192	1 208	1 226	1 248	1 277
40	-	-	1 417	1 440	1 459	1 477	1 496	1 519	1 548
50	-	-	-	1 804	1 824	1 843	1 861	1 883	1 910
60	-	-	-	-	2 322	2 339	2 356	2 375	2 398
Current consumption in A									
10	3.93	4.02	4.09	4.13	4.15	-	-	-	-
20	4.53	4.63	4.71	4.78	4.83	4.88	4.93	-	-
30	5.33	5.43	5.52	5.60	5.67	5.74	5.82	5.90	5.99
40	-	-	6.66	6.73	6.81	6.89	6.98	7.09	7.21
50	-	-	-	8.34	8.41	8.48	8.58	8.69	8.83
60	-	-	-	-	10.61	10.67	10.75	10.85	10.99
Mass flow in kg/h									
10	37	47	58	71	86	-	-	-	-
20	36	45	57	70	85	102	122	-	-
30	34	44	55	68	83	100	120	143	168
40	-	-	53	66	80	98	118	140	165
50	-	-	-	63	77	94	114	136	161
60	-	-	-	-	74	90	110	132	156
Coefficient of performance (C.O.P.)									
10	2.52	3.13	3.87	4.76	5.82	-	-	-	-
20	1.86	2.34	2.91	3.58	4.38	5.29	6.32	-	-
30	1.34	1.71	2.14	2.65	3.25	3.94	4.73	5.60	6.54
40	-	-	1.51	1.89	2.33	2.84	3.43	4.09	4.82
50	-	-	-	1.28	1.59	1.95	2.38	2.86	3.41
60	-	-	-	-	1.02	1.27	1.56	1.90	2.30

Nominal performance at to = -10 °C, tc = 45 °C

Cooling capacity	3 149	W
Power input	1 627	W
Current consumption	7.54	A
Mass flow	79	kg/h
C.O.P.	1.94	

to: Evaporating temperature at dew point
tc: Condensing temperature at dew point
Rating conditions : Superheat = 10 K , Subcooling = 0 K

Pressure switch settings

Maximum HP switch setting	29.7	bar(g)
Minimum LP switch setting	1.4	bar(g)
LP pump down setting	2	bar(g)

Sound power data

Sound power level	dB(A)
With accoustic hood	dB(A)

Tolerance according EN12900

Performance data at 50 Hz, EN 12900 rating conditions, Suction temp. = 20 °C

R452A

Cond. temp. in °C (tc)	Evaporating temperature in °C (to)								
	-30	-25	-20	-15	-10	-5	0	5	10
Cooling capacity in W									
10	2 201	2 734	3 380	4 152	5 062	-	-	-	-
20	1 973	2 476	3 080	3 796	4 638	5 618	6 749	-	-
30	-	2 210	2 759	3 407	4 167	5 053	6 076	7 251	8 588
40	-	-	2 420	2 987	3 653	4 431	5 335	6 375	7 566
50	-	-	-	-	3 100	3 758	4 528	5 423	6 455
60	-	-	-	-	-	3 037	3 661	4 397	5 256
Power input in W									
10	826	837	844	849	853	-	-	-	-
20	984	1 004	1 017	1 026	1 032	1 036	1 039	-	-
30	-	1 208	1 231	1 247	1 257	1 263	1 266	1 269	1 271
40	-	-	1 502	1 528	1 546	1 557	1 563	1 566	1 566
50	-	-	-	-	1 915	1 935	1 947	1 953	1 954
60	-	-	-	-	-	2 412	2 433	2 446	2 451
Current consumption in A									
10	4.08	4.13	4.19	4.25	4.33	-	-	-	-
20	4.74	4.81	4.87	4.93	4.99	5.06	5.14	-	-
30	-	5.68	5.78	5.85	5.91	5.96	6.02	6.08	6.16
40	-	-	6.95	7.06	7.15	7.21	7.26	7.30	7.35
50	-	-	-	-	8.77	8.86	8.92	8.97	9.00
60	-	-	-	-	-	10.97	11.08	11.15	11.19
Mass flow in kg/h									
10	44	56	69	85	105	-	-	-	-
20	43	55	69	85	104	127	154	-	-
30	-	54	67	83	103	126	153	185	222
40	-	-	65	81	100	123	150	182	219
50	-	-	-	-	97	120	147	178	215
60	-	-	-	-	-	116	142	173	210
Coefficient of performance (C.O.P.)									
10	2.66	3.27	4.00	4.89	5.93	-	-	-	-
20	2.01	2.47	3.03	3.70	4.50	5.42	6.49	-	-
30	-	1.83	2.24	2.73	3.32	4.00	4.80	5.72	6.76
40	-	-	1.61	1.96	2.36	2.85	3.41	4.07	4.83
50	-	-	-	-	1.62	1.94	2.33	2.78	3.30
60	-	-	-	-	-	1.26	1.50	1.80	2.14

Nominal performance at to = -10 °C, tc = 45 °C

Cooling capacity	3 381	W
Power input	1 719	W
Current consumption	7.91	A
Mass flow	99	kg/h
C.O.P.	1.97	

to: Evaporating temperature at dew point
tc: Condensing temperature at dew point
Rating conditions : Suction gas temp. = 20 °C , Subcooling = 0 K

Pressure switch settings

Maximum HP switch setting	29.7	bar(g)
Minimum LP switch setting	1.4	bar(g)
LP pump down setting	2	bar(g)

Sound power data

Sound power level	dB(A)
With accoustic hood	dB(A)

Tolerance according EN12900

Performance data at 50 Hz, EN 12900 rating conditions, Superheat = 10 K

R452A

Cond. temp. in °C (tc)	Evaporating temperature in °C (to)								
	-30	-25	-20	-15	-10	-5	0	5	10
Cooling capacity in W									
10	2 130	2 661	3 309	4 087	5 009	-	-	-	-
20	1 872	2 370	2 972	3 692	4 545	5 542	6 697	-	-
30	1 620	2 071	2 614	3 263	4 033	4 938	5 992	7 205	8 588
40	1 374	1 767	2 239	2 805	3 480	4 279	5 218	6 309	7 566
50	-	-	1 849	2 319	2 887	3 568	4 379	5 336	6 455
60	-	-	-	-	2 256	2 806	3 476	4 286	5 256
Power input in W									
10	826	837	844	849	853	-	-	-	-
20	984	1 004	1 017	1 026	1 032	1 036	1 039	-	-
30	1 176	1 208	1 231	1 247	1 257	1 263	1 266	1 269	1 271
40	1 420	1 466	1 502	1 528	1 546	1 557	1 563	1 566	1 566
50	-	-	1 848	1 886	1 915	1 935	1 947	1 953	1 954
60	-	-	-	-	2 382	2 412	2 433	2 446	2 451
Current consumption in A									
10	4.08	4.13	4.19	4.25	4.33	-	-	-	-
20	4.74	4.81	4.87	4.93	4.99	5.06	5.14	-	-
30	5.56	5.68	5.78	5.85	5.91	5.96	6.02	6.08	6.16
40	6.62	6.81	6.95	7.06	7.15	7.21	7.26	7.30	7.35
50	-	-	8.47	8.64	8.77	8.86	8.92	8.97	9.00
60	-	-	-	-	10.83	10.97	11.08	11.15	11.19
Mass flow in kg/h									
10	53	65	79	96	115	-	-	-	-
20	51	64	78	95	114	137	163	-	-
30	50	63	77	94	113	135	161	190	222
40	49	61	75	91	110	133	158	187	219
50	-	-	72	88	107	129	154	183	215
60	-	-	-	-	103	125	150	178	210
Coefficient of performance (C.O.P.)									
10	2.58	3.18	3.92	4.81	5.87	-	-	-	-
20	1.90	2.36	2.92	3.60	4.41	5.35	6.44	-	-
30	1.38	1.71	2.12	2.62	3.21	3.91	4.73	5.68	6.76
40	0.97	1.20	1.49	1.84	2.25	2.75	3.34	4.03	4.83
50	-	-	1.00	1.23	1.51	1.84	2.25	2.73	3.30
60	-	-	-	-	0.95	1.16	1.43	1.75	2.14

Nominal performance at to = -10 °C, tc = 45 °C

Cooling capacity	3 188	W
Power input	1 719	W
Current consumption	7.91	A
Mass flow	109	kg/h
C.O.P.	1.85	

to: Evaporating temperature at dew point
tc: Condensing temperature at dew point
Rating conditions : Superheat = 10 K , Subcooling = 0 K

Pressure switch settings

Maximum HP switch setting	29.7	bar(g)
Minimum LP switch setting	1.4	bar(g)
LP pump down setting	2	bar(g)

Sound power data

Sound power level	dB(A)
With accoustic hood	dB(A)

Tolerance according EN12900

Performance data at 50 Hz, EN 12900 rating conditions, Suction temp. = 20 °C

R513A

Cond. temp. in °C (tc)	Evaporating temperature in °C (to)								
	-15	-10	-5	0	5	10	15	18	
Cooling capacity in W									
10	2 432	2 997	3 690	-	-	-	-	-	-
20	2 232	2 756	3 391	4 152	5 052	-	-	-	-
30	2 023	2 502	3 077	3 762	4 570	5 514	-	-	-
40	-	2 234	2 747	3 354	4 067	4 901	5 868	6 518	-
50	-	-	2 400	2 926	3 542	4 263	5 101	5 666	-
60	-	-	-	2 478	2 994	3 599	4 306	4 784	-
70	-	-	-	2 010	2 423	2 910	3 482	3 873	-
73	-	-	-	-	2 248	2 698	3 230	3 593	-
Power input in W									
10	632	632	630	-	-	-	-	-	-
20	718	723	724	721	717	-	-	-	-
30	836	850	856	856	852	845	-	-	-
40	-	1 012	1 027	1 033	1 032	1 026	1 016	1 010	-
50	-	-	1 238	1 254	1 259	1 257	1 249	1 241	-
60	-	-	-	1 518	1 534	1 539	1 535	1 528	-
70	-	-	-	1 826	1 856	1 871	1 875	1 872	-
73	-	-	-	-	1 962	1 981	1 988	1 987	-
Current consumption in A									
10	3.25	3.29	3.34	-	-	-	-	-	-
20	3.64	3.67	3.71	3.74	3.75	-	-	-	-
30	4.15	4.18	4.22	4.25	4.27	4.24	-	-	-
40	-	4.85	4.90	4.94	4.97	4.96	4.90	4.83	-
50	-	-	5.77	5.84	5.89	5.91	5.87	5.82	-
60	-	-	-	6.97	7.05	7.11	7.11	7.08	-
70	-	-	-	8.37	8.49	8.59	8.63	8.64	-
73	-	-	-	-	8.98	9.09	9.15	9.16	-
Mass flow in kg/h									
10	46	58	71	-	-	-	-	-	-
20	46	57	71	87	106	-	-	-	-
30	46	57	70	86	105	127	-	-	-
40	-	56	69	85	103	125	152	169	-
50	-	-	68	83	101	123	149	166	-
60	-	-	-	81	99	120	145	162	-
70	-	-	-	79	96	117	141	158	-
73	-	-	-	-	95	115	140	156	-
Coefficient of performance (C.O.P.)									
10	3.85	4.74	5.85	-	-	-	-	-	-
20	3.11	3.81	4.69	5.76	7.05	-	-	-	-
30	2.42	2.94	3.60	4.40	5.37	6.53	-	-	-
40	-	2.21	2.68	3.25	3.94	4.78	5.77	6.46	-
50	-	-	1.94	2.33	2.81	3.39	4.09	4.57	-
60	-	-	-	1.63	1.95	2.34	2.81	3.13	-
70	-	-	-	1.10	1.31	1.56	1.86	2.07	-
73	-	-	-	-	1.15	1.36	1.62	1.81	-

Nominal performance at to = -10 °C, tc = 45 °C

Cooling capacity	2 096	W
Power input	1 107	W
Current consumption	5.25	A
Mass flow	55	kg/h
C.O.P.	1.89	

Pressure switch settings

Maximum HP switch setting	29.7	bar(g)
Minimum LP switch setting	1.4	bar(g)
LP pump down setting	2	bar(g)

Sound power data

Sound power level	dB(A)
With accoustic hood	dB(A)

to: Evaporating temperature at dew point

tc: Condensing temperature at dew point

Rating conditions : Suction gas temp. = 20 °C , Subcooling = 0 K

Tolerance according EN12900

Performance data at 50 Hz, EN 12900 rating conditions, Superheat = 10 K

R513A

Cond. temp. in °C (tc)	Evaporating temperature in °C (to)								
	-15	-10	-5	0	5	10	15	18	
Cooling capacity in W									
10	2 385	2 954	3 654	-	-	-	-	-	-
20	2 167	2 695	3 339	4 113	5 030	-	-	-	-
30	1 939	2 422	3 007	3 708	4 540	5 514	-	-	-
40	1 701	2 136	2 659	3 285	4 028	4 901	5 918	6 601	-
50	-	1 836	2 295	2 842	3 493	4 263	5 165	5 776	-
60	-	-	1 914	2 380	2 936	3 599	4 384	4 921	-
70	-	-	-	1 898	2 357	2 910	3 575	4 036	-
73	-	-	-	1 749	2 178	2 698	3 327	3 765	-
Power input in W									
10	632	632	630	-	-	-	-	-	-
20	718	723	724	721	717	-	-	-	-
30	836	850	856	856	852	845	-	-	-
40	986	1 012	1 027	1 033	1 032	1 026	1 016	1 010	-
50	-	1 211	1 238	1 254	1 259	1 257	1 249	1 241	-
60	-	-	1 489	1 518	1 534	1 539	1 535	1 528	-
70	-	-	-	1 826	1 856	1 871	1 875	1 872	-
73	-	-	-	1 928	1 962	1 981	1 988	1 987	-
Current consumption in A									
10	3.25	3.29	3.34	-	-	-	-	-	-
20	3.64	3.67	3.71	3.74	3.75	-	-	-	-
30	4.15	4.18	4.22	4.25	4.27	4.24	-	-	-
40	4.81	4.85	4.90	4.94	4.97	4.96	4.90	4.83	-
50	-	5.70	5.77	5.84	5.89	5.91	5.87	5.82	-
60	-	-	6.87	6.97	7.05	7.11	7.11	7.08	-
70	-	-	-	8.37	8.49	8.59	8.63	8.64	-
73	-	-	-	8.84	8.98	9.09	9.15	9.16	-
Mass flow in kg/h									
10	51	63	76	-	-	-	-	-	-
20	51	62	75	91	108	-	-	-	-
30	50	62	74	90	107	127	-	-	-
40	50	61	73	88	105	125	148	163	-
50	-	60	72	87	103	123	145	160	-
60	-	-	70	84	101	120	142	156	-
70	-	-	-	82	98	117	138	152	-
73	-	-	-	81	97	115	136	150	-
Coefficient of performance (C.O.P.)									
10	3.78	4.67	5.80	-	-	-	-	-	-
20	3.02	3.73	4.61	5.70	7.02	-	-	-	-
30	2.32	2.85	3.51	4.33	5.33	6.53	-	-	-
40	1.72	2.11	2.59	3.18	3.90	4.78	5.82	6.54	-
50	-	1.52	1.85	2.27	2.77	3.39	4.14	4.65	-
60	-	-	1.29	1.57	1.91	2.34	2.86	3.22	-
70	-	-	-	1.04	1.27	1.56	1.91	2.16	-
73	-	-	-	0.91	1.11	1.36	1.67	1.90	-

Nominal performance at to = -10 °C, tc = 45 °C

Cooling capacity	1 988	W
Power input	1 107	W
Current consumption	5.25	A
Mass flow	60	kg/h
C.O.P.	1.80	

Pressure switch settings

Maximum HP switch setting	29.7	bar(g)
Minimum LP switch setting	1.4	bar(g)
LP pump down setting	2	bar(g)

Sound power data

Sound power level	dB(A)
With accoustic hood	dB(A)

to: Evaporating temperature at dew point
tc: Condensing temperature at dew point
Rating conditions : Superheat = 10 K , Subcooling = 0 K

Tolerance according EN12900